KAHLHORN
Technischer Handel

Dipl.-Ing. (FH) Peter Kahlhorn
Rambeeler Str. 6
23936 Upahl
UID: DE 174 168 707

E-Mail: info@kahlhorn.com
Web: www.kahlhorn.com

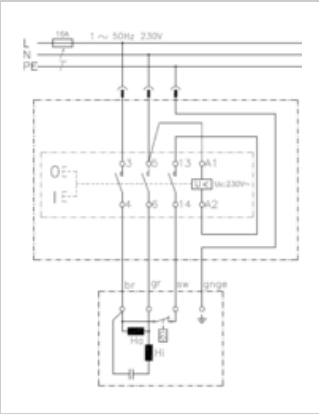

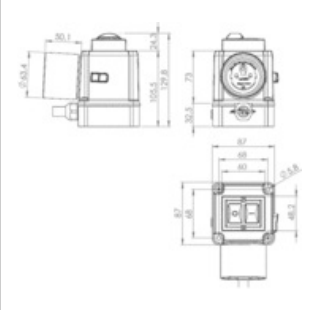

Switch-plug combination K700/TAZ/ST3 up to 3 kW

Manfacturer:	Klinger & Born
Type:	K700/TAZ/ST3/KA3/P/Therm
Product no.:	0098.7003
Weight:	0.700

Details

Ready-to-connect AC switch-plug combination for circular saws, stone cutting machine, shredders and similar hand-held power tools.

Properties

- 2-pole switch (Contactor)
- Switching capacity up to 3 kW
- Undervoltage release
- Connection possibility for thermal contact
- Including splash water proof cover
- 1 meter connection cable H07RN-F 4 G1,5

Installation / connection (refer to wiring diagram)

The switch is screwed on the housing base. Grid dimension of the screws: 68 x 68 mm.
The cable outlet is on the side of the housing base, by factory setting on the opposite side of the keypad. By rotating the base, the cable can be routed out of all 4 sides.

The black wire is the connection for the thermal contact. If the motor does not have a thermal contact, the black wire has to connected with the brown wire on the terminal board.

Specifications

Voltage Ue	230 V~
Current Ie	13.5 A
Contactor	KB-04, 230 V/3s~
Switching capacity	3.0 kW 230V~
Type of actuation	Mechanically on/off
Connector	European standard connector (Type F, CEE 7/4 plug, CEE 7/7 plug),16A
Housing material	Polypropylene PP
Mounting position	Any
Protection class	IP54, splash water proof
Connection cable	1 m H07RN-F 4 G1,5
Mounting dimensions	68 x 68 mm