KAHLHORN
Technischer Handel

Dipl.-Ing. (FH) Peter Kahlhorn
Rambeeler Str. 6
23936 Upahl
UID: DE 174 168 707

E-Mail: info@kahlhorn.com
Web: www.kahlhorn.com

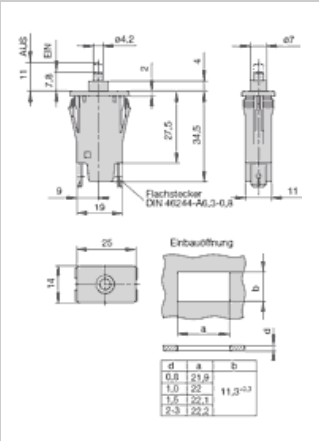

E-T-A circuit breaker 1140-F111-P1M1-14,0 A

Manfacturer:	E-T-A
Type:	1140-F111-P1M1-14,0
Product no.:	1140-F111-P1M1-14.0
Weight:	0.050

Details

1-pole thermal over current circuit breaker with snap-on mounting.

Properties

- Reliable switching behaviour due to spring-loaded snap mechanism
- Uninfluenceable trip-free mechanism
- Is according to the circuit breaker norm EN 60934 (IEC 60934): R-Typ, TO.

Replacement for Weber Unimat T11-611 or Kedu RB1-2

Usable as a replacement for Weber Unimat T11-611 (please note the dimensions)

Specifications

Nominal current	12.0 - 16.0 A
Nominal voltage	AC 240 V, DC 48 V
Protection class	Operating area IP40, connecting area IP00
Isolation	Reinforced isolation in the actuation element
Ambient temperature	-20.60 °C
Switch-off	Thermal (träge)
Approval	VDE, SEV, Kema (EN 60934), CSA. UL
Installation	Snap-on mounting
Installation dimension	11.3 x 22 mm
Connection	Flat plug 6.3 mm